HOPPER COMPONENTS

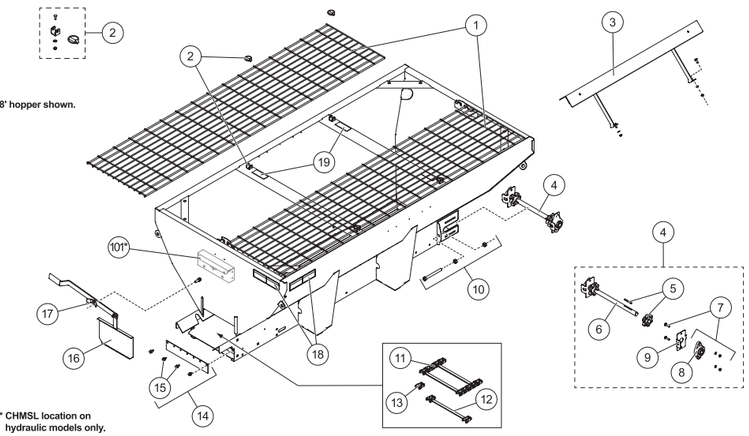

Item	Part	Description	Item	Part	Description
1	99515	Top Screen – 7' (electric model only)	9	99765	Bearing Alignment Plate
	99516	Top Screen – 8'	10	99073	Tensioner Bolt Kit
	99517	Top Screen – 9' Narrow	11	94898	Pintle Chain (108 Links) – 7' & 8' Hoppers
	99518	Top Screen – 9' Wide		68474	Pintle Chain (123 Links) – 9' & 10' Hoppers
	99519	Top Screen – 10' (gas & hydraulic models only)	12	68492	Conveyor Repair Bar w/Pins & Cotters
2	99578*	Screen Attachment Kit	13	68475	Conveyor Repair Link w/Pins & Cotters
ns	99777	Rubber Grip, Wing Bolt (pkg of 2)	14	78266	Wiper Replacement Kit
3	99482	Inverted V Kit, Small – 7' & 8' Hoppers	15	99079	Rivet Kit, Steel Hopper Wiper
ns	99119	Inverted V Kit, Large – 9' & 10' Hoppers	16	99083	Feed Gate Assembly w/Wing Nut
4	99480	Idler Shaft Assembly Kit	ns	99523	Rubber Grip, Feed Gate Handle
5	99479	6-Tooth Sprocket Assembly	17	65218	1/2-13 Wing Nut G5
6	94351	Idler Shaft	18	68584	Label – Warning/Caution, Spreaders
7	94953	Spreader Bearing Kit	19	67272	Label – Caution, Do Not Lift
8	94536	Bearing 1.125 ID 2-Bolt Flange	ns	68790	Ratchet Straps Kit (4 straps)

*For hoppers with single, center top screen support bar, use two PN 96038 Wing Bolts per side in place of the Item 2 kit.

ns = not shown G = Grade

CHUTE ASSEMBLY

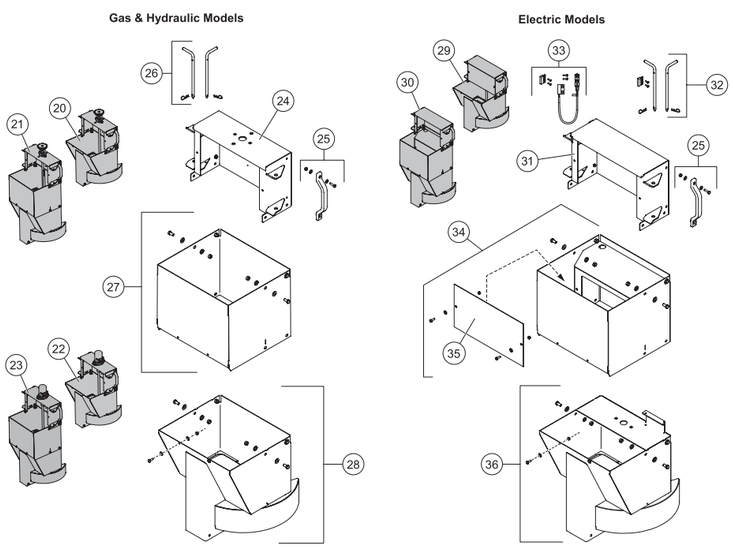

Item	Part	Description	Item	Part	Description
20	96545*	Short Chute Assembly – Gas	ns	99619	Chute Extension Kit – Gas (accessory only)
21	99141*	Long Chute Assembly – Gas	ns	99698	Chute Extension Kit – Hydraulic (accessory only)
22	99563*	Short Chute Assembly – Hydraulic	29	99132*	Short Chute Assembly – Electric
23	99564*	Long Chute Assembly – Hydraulic	30	99096*	Long Chute Assembly – Electric
24	96385	Chute Upper Section	31	96386	Chute Upper Section
25	99098	Handle Kit	32	99613†	Chute Attachment Kit – Electric
26	99742	Chute Attachment Kit – Gas & Hydraulic	33	99568	Magnetic Chute Interlock Kit
27	99531†	Chute Middle Section Kit	34	99139‡	Chute Middle Section/Extension Kit – Electric
28	99554	Chute Lower Section Kit	35	99207	Chute Motor Cover
ns	99557	Bolt Bag – Chute Lower Section	36	99137	Chute Lower Section Kit

* Includes spinner and shutter assemblies, shown separately. † Includes magnetic actuator switch. ‡ Used in long chute assembly only.

ns = not shown

Striker™ HOPPER SPREADERS

Dual Electric, Gasoline Engine, and Dual Hydraulic Models

Full parts lists available at *www.westernplows.com:* Lit. Nos. 99588 (electric), 99589 (gas), and 99617 (hydraulic).

SPINNER & SHUTTER ASSEMBLY

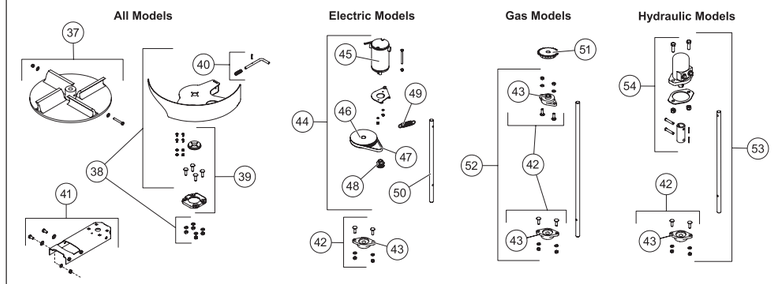

Item	Part	Description	Item	Part	Description
37	99485	Poly Spinner Kit	46	78066	40-Tooth Cogged Belt Pulley 3/4 Bore
38	99135	Shutter Replacement Kit	47	M1355	Spinner Drive Belt
39	96504	Chute Shutter Bearing Kit	48	93101	10-Tooth Pulley, Drive Gear
40	96505	Shutter Lock Pin Kit	49	99776	Spinner Motor Spring
41	96392	Shutter Bearing Support Kit	50	99228	Electric Spinner Shaft
ns	96529	Bolt Bag – Shutter Bearing Support Kit	51	65193	Sprocket #40 24T 3/4 ID w/Set Screws
42	96501	Bearing Kit	52	99573	Chute Bearing Kit, Short Spinner Shaft – Gas
43	96167	Pillow Block Bearing 3/4 Bore	ns	96544	Chute Bearing Kit, Long Spinner Shaft – Gas
44	96506	Chute Drive Service Kit – Electric	53	99562	Chute Bearing Kit, Short Spinner Shaft – Hydraulic
ns	99614	Bolt Bag, Chute Service Kit	ns	99561	Chute Bearing Kit, Long Spinner Shaft – Hydraulic
45	93100	Motor 12V 1/3 hp, Spinner	54	99560	Hydraulic Motor Kit, Spinner

ns = not shown

POWER GROUP & ENGINE COVER – Gas

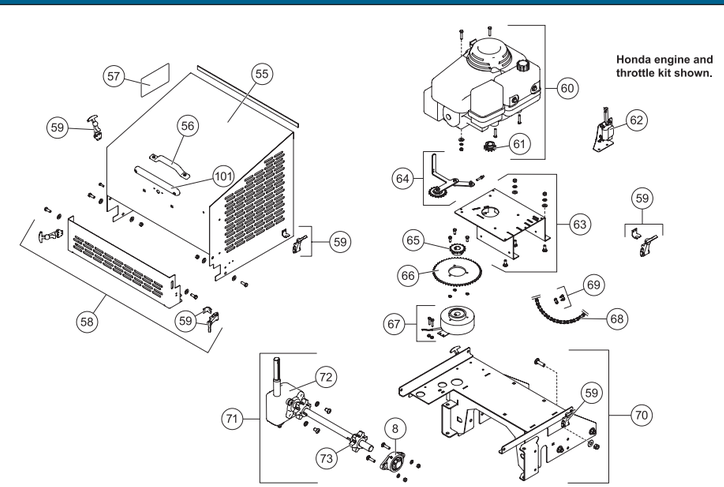

Item	Part	Description	Item	Part	Description
55	96395	Engine Cover	64	96565	Chain Tensioner Kit
56	48921	Counter-Bored Plastic Handle	65	65181	Sprocket #40 x 16T x 1" ID
57	65097	Label – Warning, Gasoline	66	65209	Sprocket, Clutch, #40 x 52T
58	96394	Engine Cover Door Kit	67	99124	Electric Clutch Kit
59	65224	Rubber Strap Hold-Down Kit	68	99518	#40 Roller Chain w/Master Link
60	99145	Engine Kit – Honda	69	95894	#40 Chain Master Link
ns	99147	Engine Kit – Briggs & Stratton	70	99148	Power Group Base – Gas
61	65214	Sprocket #40 x 12T x 1" ID	71	99117	Gear Box Assembly
62	69781	Throttle Control Motor Kit – Honda	72	95567	Gear Case
ns	69782	Throttle Control Motor Kit – Briggs & Stratton	73	65909	Drive Sprocket 6T
63	99128	Gas Engine Plate Kit			

ns = not shown

POWER GROUP – Hydraulic & Electric

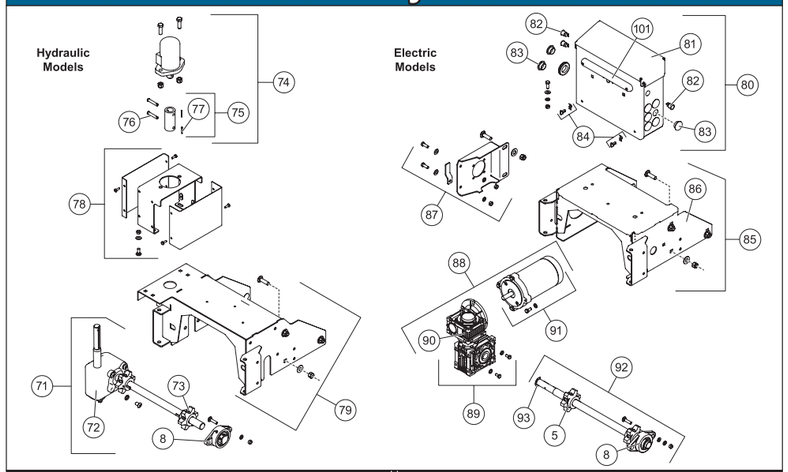

Item	Part	Description	Item	Part	Description
74	99560	Hydraulic Motor Kit SH	85	99092	Electric Power Group Mount Kit
75	96399	0.75 to 1.0 Coupler, Service	86	99569	Electric Power Group Mount
76	67147	3/8 x 2 Clevis Pin HT G5	87	99089	Gear Box Bracket Kit
77	91901	1/8 x 3/4 Cotter Pin	88	99091	Electric Conveyor Drive Kit
78	99558	Hydraulic Motor Mount Kit	89	99087	Gear Box Kit
ns	99559	Bolt Bag, Hydraulic Motor Mount	90	99067	Gear Box 10 x 10 x 2X Worm Gear
79	96543	Power Group Base – Hydraulic	ns	86792	Gear Box Cover Kit, Primary
80	99077	Electrical Box Assembly	ns	86799	Gear Box Cover Kit, Secondary
81	99696	Electrical Box	91	99085	Conveyor Motor Kit
82	99254	Switch, Push Button	92	99094	Drive Shaft Kit – Electric
83	99195	Break-Through Plug	93	330	1" Retaining Ring
84	99570	Electrical Box Latch Kit (pkg of 2)			

ns = not shown G = Grade

CONTROLS / ELECTRICAL / CHMSL

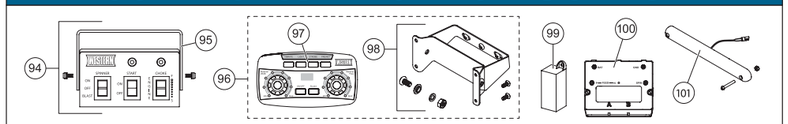

Item	Part	Description	Item	Part	Description
94	98985	Cab Control 2-Light w/Bracket – Gas	ns	99688	Harness Assembly, Vehicle – Hydraulic
95	65516	Control Bracket Kit – Gas	ns	78402	Vehicle-Side Harness Kit – Electric
96	99534	Cab Control Kit – Electric	ns	69902	Vehicle Control Harness – Electric
97	99774	Cab Control 2-Knob – Electric	ns	76057	Vehicle Harness Assembly – Electric
98	52345	Cab Control Bracket Kit – Electric	ns	22511	22" Battery Cable (Red) – Electric
99	95837	Isolated Stud Block/Fuse Holder – Electric	ns	69906	Hopper Harness Assembly – Electric
100	52385	Spreader Module 4-Post – Electric	ns	78103	Conveyor Motor Cable – Electric
101	99080	CHMSL Kit – All Models	ns	78361	Cable Assembly, Spinner Motor – Electric
ns	67526	Control Harness 12V Positive (Red) – Gas	ns	78105	Cable Assembly, Chute Spinner Motor – Electric
ns	69922	Control Harness, Ground (Black) – Gas	ns	69939	10-Pin Connector w/Switch Connector – Electric
ns	69921	Vehicle Harness, 11-Pin – Gas	ns	78385	Cable, Module to Isolated Stud Block – Electric
ns	63726	Vehicle Harness Repair Kit, 11-Pin – Gas	ns	99759	Plug Cover – Electric
ns	69923	Spreader Harness 11-Pin – Gas	ns	99772	Motor Terminal Cover (pkg of 2) – Electric
ns	99736	Harness Assembly, Spreader – Hydraulic			

ns = not shown

LOGO PLATES / ACCESSORIES

Part	Description	Part	Description	Part	Description
96562	Side Logo Plate, Striker™ – Sm 11.5"	65605-3	Battery Tray Kit – Gas	92532	Truck Mount Kit, 2 Bars – 8' Hopper
96564	Side Logo Plate, Striker – Lg 23"	95245	Dual-Flow Control Valve – Hydraulic	92533	Truck Mount Kit, 3 Bars – 9', 10' Hoppers
96561	Rear Logo Plate, WESTERN® – Sm 13"	99505-1*	Primary Work Light Kit		PRE-WET KITS
96563	Rear Logo Plate, WESTERN – Lg 18"	99732-1*	Secondary Work Light Kit	76400	Standard Pump Kit, On-Off System
99629	Acc. Bracket and Harness Kit – Gas	99494*	Strobe Light Kit	76420	Deluxe Pump Kit, Full-Feature System
99627	Acc. Enclosure and Harness Kit – Hydr.	99504-1*	Vibrator Kit	76405	Pre-Wet Pump Switch Kit
99126	Starter Relay Kit – Gas	99488	Hopper Side Extension Kit	76425	50-Gallon Tank Kit (2 x 25 gal)
94680	Vehicle Battery Harness Kit – Gas	99690	Tie-Down Kit SH Chain	76450	100-Gallon Tank Kit (2 x 50 gal)

* Requires installation of 99629 Accessory Bracket and Harness Kit (gas models) or 99627 Accessory Enclosure and Harness Kit (hydraulic models).

Copyright © 2017 Douglas Dynamics, LLC. All rights reserved. This material may not be reproduced or copied, in whole or in part, in any printed, mechanical, electronic, film or other distribution and storage media, without the written consent of Western Products. Authorization to photocopy items for internal or personal use by Western Products outlets or spreader owner is granted.

Western Products reserves the right under its product improvement policy to change construction or design details and furnish equipment when so altered without reference to illustrations or specifications used. Western Products or the vehicle manufacturer may require or recommend optional equipment for snow removal. Do not exceed vehicle ratings with a spreader. Western Products offers a limited warranty for all spreaders and accessories. See separately printed page for this important information. The following are registered (®) or unregistered (™) trademarks of Douglas Dynamics, LLC: Striker™, WESTERN®.

Lit. No. 72211, Rev. 01 Printed in U.S.A. June 15, 2017

Western Products
P.O. Box 245038, Milwaukee, WI 53224-9538
www.westernplows.com

Date: _____

Name: _____

Address: _____

_____

Email: _____

Phone: _____

Fax: _____

Part(s) Needed: _____

_____

Additional Items: *(if not indicated inside)* _____

_____

_____

Locations

500 PULASKI ROAD KINGS PARK, NY 11754
ph: 631.544.9000 *fax:* 631.544.0942

106 LUZERNE ROAD QUEENSBURY, NY 12804
ph: 518.793.2265 *fax:* 518.793.2597

2090 CENTRAL AVENUE SCHENECTADY, NY 12304
ph: 518.456.2281 *fax:* 518.862.9271

9 BUSINESS PARK DRIVE SMITHFIELD, RI 02917
ph: 401.231.9797 *fax:* 401.231.8804

121 LIBERTY LANE CHALFONT, PA 18914
ph: 215.997.3353 *fax:* 215.997.2319

7655 PULASKI HIGHWAY BALTIMORE, MD 21237
ph: 410.866.2100 *fax:* 410.866.1711

6901 ROLLING MILL ROAD BALTIMORE, MD 21224
ph: 410.282.7487 *fax:* 410.282.7543

2502 ROUTE 130 N. CINNAMINSON, NJ 08077
ph: 856.303.1315 *fax:* 856.303.1361

8300 NE UNDERGROUND DR. PILLAR 300K KANSAS CITY, MO 64161
ph: 888.758.6696 *fax:* 816.454.2714

DEJANA Truck and Utility Equipment

© 2018 Douglas Dynamics, LLC. All Rights Reserved.

A DIVISION OF DOUGLAS DYNAMICS, L.L.C.

DEJANA Truck and Utility Equipment

Striker HOPPER SPREADERS

Dual Electric, Gasoline Engine, and Dual Hydraulic Models

Full parts lists available at *www.westernplows.com:* Lit. Nos. 99588 (electric), 99589 (gas), and 99617 (hydraulic).

- *Hopper Components*
- *Chute Assembly*
- *Spnner & Shutter Assembly*
- *Power Group & Engine Cover - Gas*
- *Power Group - Hydraulic & Electric*
- *Controls/ Electrical/ CHMSL*
- *Logo Plates/ Accessories*